EEDTS Pro super loco decoder

for use with virtually any make of locomotive

The super loco decoder (ESLD) described in this article provides a worthwhile alternative for model railway enthusiasts who want to make their locomotives digital at reasonable cost. One of the benefits of building it yourself is that the design can be adapted to virtually any make of locomotive. Another is that the loco decoder provides several additional facilities that complete the digital control of the model railway.

Brief specification

- *Compatible with old and new Märklin format*
- *Suitable for two-rail and three-rail systems*
- *Suitable for d.c. and a.c. motors*
- *Four functions; one of which is suitable for use as a preset flashing light*
- *Loco address programmable via personal computer or diode matrix*
- *Top speed presettable*
- *Rate of acceleration and deceleration presettable*
- *Brightness of headlights presettable*
- *Frequency of flashing light presettable*
- *Locomotive detection by infra-red LED*
- *Storage of movement and function settings for indeterminate period in case of power-down*

Design by H J Prince

INTRODUCTION

A glance at the brief specification shows that the super loco decoder is suitable for universal applications. It may be used with virtually all current model railway systems, since a large number of functions may be selected at will and to personal requirements. Some of these are selected by software via a personal computer and the control unit described in the June 1999 issue of this magazine. The decoder may also be used as a stand-alone unit, in which case the loco addresses are set with the aid of a diode matrix. For this purpose, 16 preprogrammed loco addresses are stored in EEPROM.

OLD AND NEW FORMAT

To understand how it is possible to obtain several new functions with the current Motorola format, it is necessary to reflect on the composition of the original format.

In the original format, each data word has its origin in the 145026/145027 Motorola combination and consists of nine *trits*. The transmitter (145026) has nine inputs that recognize three levels: high (10, low (0), and open (x). This information is available in serial form at the output, so that the output signal consists of nine trits. In the Märklin system, four trits are used for loco addressing, one for switching the headlights (FO) on and off, and four for the speed and direction of travel.

Each trit consists of two bits that represent the three levels: 00; 01; 11, that is, 0, x, and 1, respectively. This gives a total of 18 bits—see **Figure 1**.

In the old format, the function-0 bit and the data bits for speed are used in binary form only. This means that up to $2^4 = 16$ steps may be set: one for standstill, one for reversing the direction of travel, and 14 for the speed. When the data bits are used in trinary form, $3^4 = 81$ combinations are possible. If this figure is reduced by the 16 steps in the old format, 65 remain, more than sufficient to control new functions.

Space does not allow all the relevant tables to be shown. Briefly, it comes down to each trinary word of four trits representing speed, direction of travel, and the status of one of the function outputs (on/off). All combinations are stored in tabular form in the decoder IC. Provided that they coincide with the data sent by the Märklin controllers, all actions will be performed smoothly and error-free.

DESIGN

In all model railway designs, compactness is a first requirement, and the decoder therefore uses a Type PIC16F84 microcontroller, IC_1. This Microdevice I/O controller provides 13 I/O connections, RAM, EPROM, and EEPROM. Together with a small number of surface-mount devices (SMDs), it is therefore eminently suitable for building a complete and compact decoder.

The circuit diagram of the decoder

is shown in **Figure 2**. Diodes D_1–D_4 in a bridge arrangement, make the polarity of the track voltage independent of the supply voltage

The supply voltage is applied to IC_1 via resistor R_5 and the base-emitter junction of transistor T_1. It is kept steady by zener diode D_9. When there is track voltage available, a current flows through the base-emitter junction of T_1, so that the transistor is driven into saturation which makes pin 2 (RA3) of IC_1 high. In the absence of track voltage, the potential across capacitor C_3 drops below the zener voltage (5.1 V), which causes T_1 to be cut off, whereupon the input of IC_1 goes low. After a certain period of time, the program executes a power-down routine and writes the data as to speed, direction of travel, and function information into EEPROM.

The clock for IC_1 is provided by a 4-MHz ceramic resonator, X_1. It may also be by a small quartz crystal, but a resonator is smaller and less expensive. Moreover, when a resonator is used, capacitors C_1 and C_2 may be omitted.

Track information is applied to an interrupt input of IC_1 via resistor R_3.

Outputs RB_1–RB_7 control the headlights, four functions, and an infra-red LED respectively. These function outputs, whose total current must not exceed 1.5 A, are buffered by IC_2.

Diodes D_5–D_8 are optional; they form a matrix that serves to set the loco addresses when the decoder is used as a stand-alone unit. Depending on the number, placement and position of the diodes they identify one of the loco addresses in a table in EEPROM. This makes it possible for 16 loco addresses to be set without the aid of external software or electronic circuitry. Each address in the table may be reprogrammed, which will be reverted to later.

If, in accordance with Table 1, a diode is soldered in one of the positions marked 'D' on the PCB, the loco address associated with that position is actuated. A number of addresses are used in the central control of the Märklin system and these are therefore easily set.

The engine control driver may be adapted for use with d.c. or a.c. motors. That for d.c. motors is shown at the lefthand top of Figure 2. Darlington transistors T_4 and T_5, and resistors R_9 and R_{10}, are not needed when Märklin series motors are used. The two stator windings of these are linked to terminals M_1 and M_2, while the common armature winding is connected to terminal M_3. Diodes D_{10} and D_{11} are connected with reverse polarity to quench the counter-e.m.f. of the motor: their cathodes are linked to terminal M_3.

When a standard d.c. motor is used, T_4, T_5, R_9, and R_{10} are needed. The motor is connected to terminals M_1 and M_2. Bear in mind that the polarity of the diodes is the opposite of that when a Märklin series motor is used.

Table 1

loco no.	loco address	diode 5678
0	1	–––––
1	2	–––D
2	3	––D–
3	4	––DD
4	5	–D––
5	6	–D–D
6	7	–DD–
7	8	–DDD
8	10	D–––
9	19	D––D
10	20	D–D–
11	22	D–DD
12	24	DD––
13	30	DD–D
14	39	DDD–
15	40	DDDD

Table 1. The loco addresses may be set with the aid of a diode matrix.

LOCO ADDRESS RECOGNITION

As already stated in the first part of this series of articles, it is essential for a reliable time table to know which train enters a station and when. The present loco decoder transmits a signal by means of an infra-red LED (shown in dashed lines at the right of Figure 2) that has the same address as that set in the decoder. This address is superimposed on a carrier of about 38 kHz and is received by a standard infra-red decoder mounted adjacent to, or on, the track. After the address has been processed (also by a PIC), it is transferred to the EEDTS Pro control unit. The same principle as in the return signallers in the EEDTS and Märklin S88 systems is used. This makes it possible to determine train-dependent track sections. This infra-red loco address return signaller will be reverted to in the next instalment.

The current through the infra-red LED is limited by a 2.2 kΩ series resistor. It is clear that the value of this resistor influences the maximum distance at which the engine is detected by the infra-red receiver. When the value is 1.0 kΩ, the engine is detected at a distance of about one metre (just over 3 ft). The type of LED is immaterial: dependent on its position and application a 3 mm or 5 mm may be used.

FIRMWARE*

The application in which the decoder is used is not processor-friendly. Varying contacts of the wheels and tracks cause frequent glitches and interruptions in the supply voltage. Since this creates a real risk of mishaps, it is necessary to guarantee correct and uninterrupted execution of the program in all circumstances. To this end, a number of important registers is tested regularly for consistent performance. When something goes wrong, the program is re-initialized and all registers are reset. The program progression is shown in **Figure 3**: at the left the main

** Strictly speaking, firmware is system software held in read-only memory (ROM).*

1

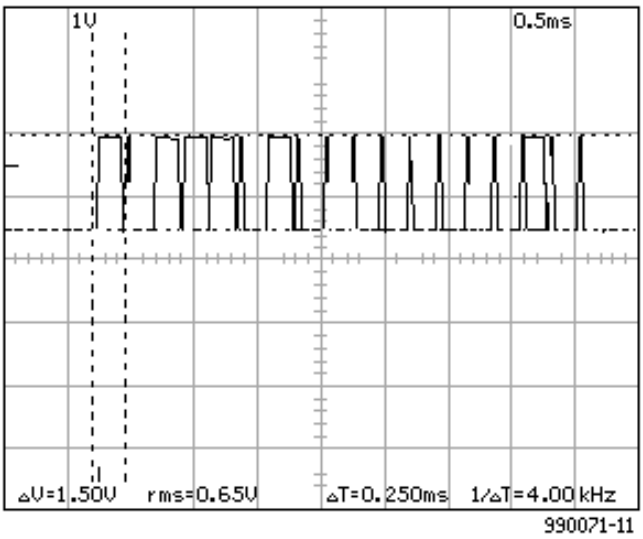

Figure 1. Representation of a trinary data word.

2

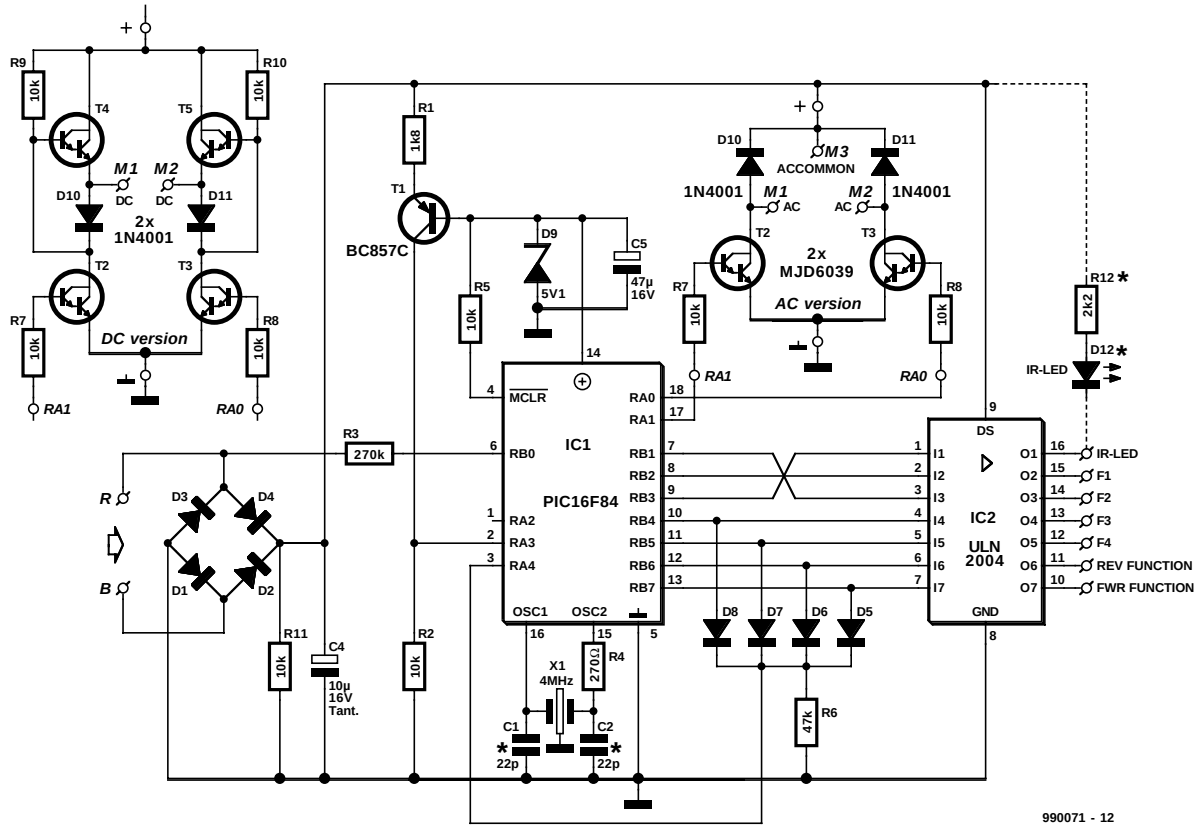

Figure 2. Circuit diagram of the super loco decoder. Expanding the section around T_2 and T_3 with T_4, T_5, R_9, R_{10} (see top lefthand) renders the decoder suitable for operation with d.c. engines.

3

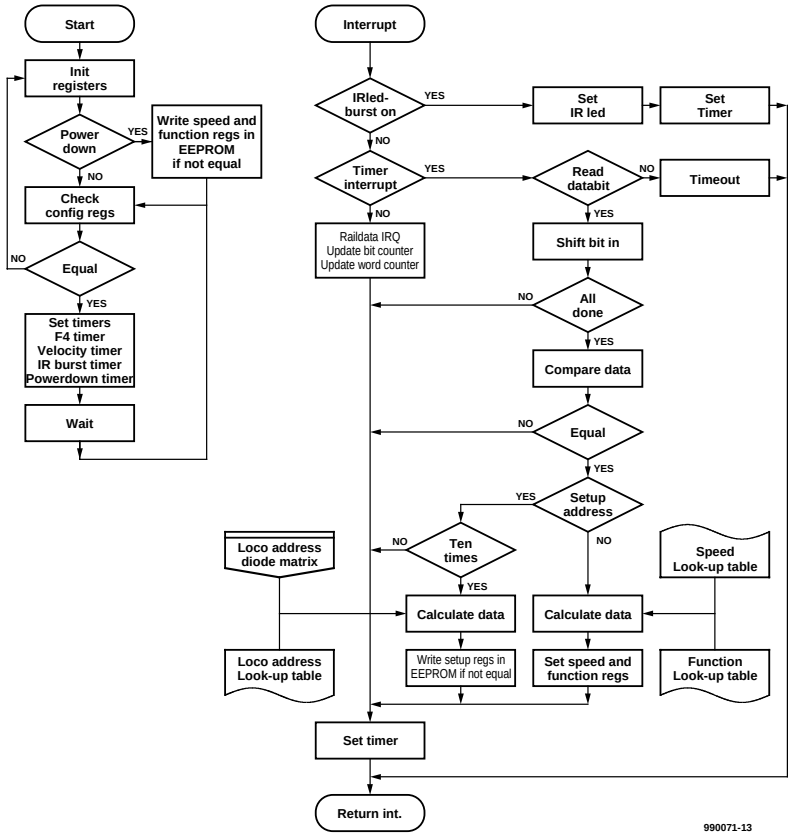

flow, and at the right that of the interrupt routine.

A hardware reset results in a re-initialization of a number of configuration registers in IC_1. At power-down, the relevant registers are stored in the EEPROM. This is followed by the program testing a number of registers whether they have retained the correct setting. If there is a discrepancy, the program starts afresh and all registers are re-initialized.

Subsequently, the timers that provide regular processes, such as the F4 flashing rate, rate of acceleration and deceleration, repetition time of the pulsating engine drive, and the dimming of the headlights, are readjusted where necessary. A wait loop determines the flow time of the main loop and therefore the repetition time of the various software timers.

At power-down, the settings of speed, direction, and function then current are written into the EEPROM, but note that this applies only to those registers that have been altered during the operating period. This arrangement prevents unnecessary writing into the EEPROM every time the track

Figure 3. Program flow of the loco decoder: at the left, the main flow; at the right, the interrupt routine.

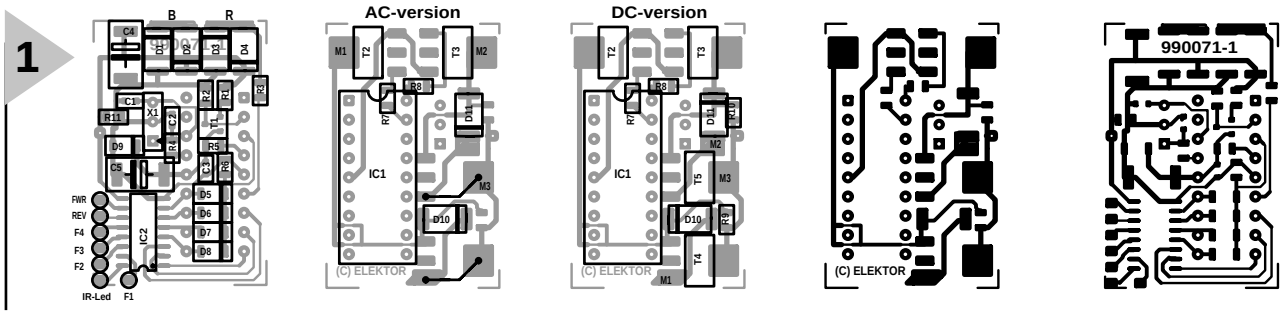

Figure 4. Double-sided printed-circuit board for the super loco decoder. The board has no provision for the infra-red LED and its series resistor.

voltage is interrupted. This lengthens the life of the EEPROM appreciably.

Interrupt routines are started by a leading or trailing edge of the data on the rails of pin 6 of IC_1 or of the integral hardware timer. Dependent on the actual situation, all bits are clocked in or the infra-red LED is driven. When two data words are received, they are compared with each other. If they are identical, and the address is 79, a set-up routine is started. Here again, writing to the EEPROM only takes place when necessary. If the address is identical to the loco address, all data bits are passed on and the various functions of the decoder set.

CONSTRUCTION

The decoder is best built on the double-sided printed-circuit board shown in **Figure 4**. Building is not an easy job for a beginner in electronic construction, since it involves surface-mount components.

Using a soldering iron with a small solder tip, tin a single pad on the board, place the relevant SMD component in the correct position and heat the tinned pad again. When the component sinks into the solder, remove the soldering iron. Do not move the component during the cooling of the tin. When the tin has cooled (blowing helps), solder the other terminal of the component into place in a similar manner. If necessary, re-heat the first solder joint to make the tin flow smoothly.

Solder all components in this manner, starting, as always, with the passive ones and ending with the ICs. If desired, IC_1 may be placed in a suitable socket. Use one with turned pins. However, if a socket is not used, the finished board is significantly thinner and this may be a great advantage in smaller locomotives. Pay good attention to the polarity of diodes D_{10} and D_{11}.

For the convenience of constructors, the components side of the a.c. and d.c. versions are shown separately in **Figure 4**. Note that on the a.c.

Parts list

Resistors:
R_1 = 1.8 kΩ*
R_2, R_5, R_7–R_{11} = 10 kΩ*
R_3 = 270 kΩ*
R_4 = 270 Ω*
R_6 = 47 kΩ*

Capacitors:
C_1, C_2 = 22 pF*
C_3 = 0.047 µF*
C_4 = 10 µF, 35 V*
C_5 = 47 µF, 10 V*

Semiconductors:
D_1–D_4, D_{10}, D_{11} = 1N4001*
D_5–D_8 = LL4148*
D_9 = 5.1 V zener BZV55C*
D_{12} = Infra-red LED LD261
T_1 = BC857C*
T_2–T_5 = MJD6039*

Integrated circuits:
IC_1 = PIC16F84* (available programmed under Order No. 996523-1 —see Readers Services toward the end of this issue)
IC_2 = ULN2004*

Miscellaneous:
X_1 = 4 MHz resonator (see text)
PC B Order no. 990071-1 (see Readers Services toward the end of this issue)

**** Surface-mount version***

Figure 5. Auxiliary circuit intended for manual adaptation of the registers.

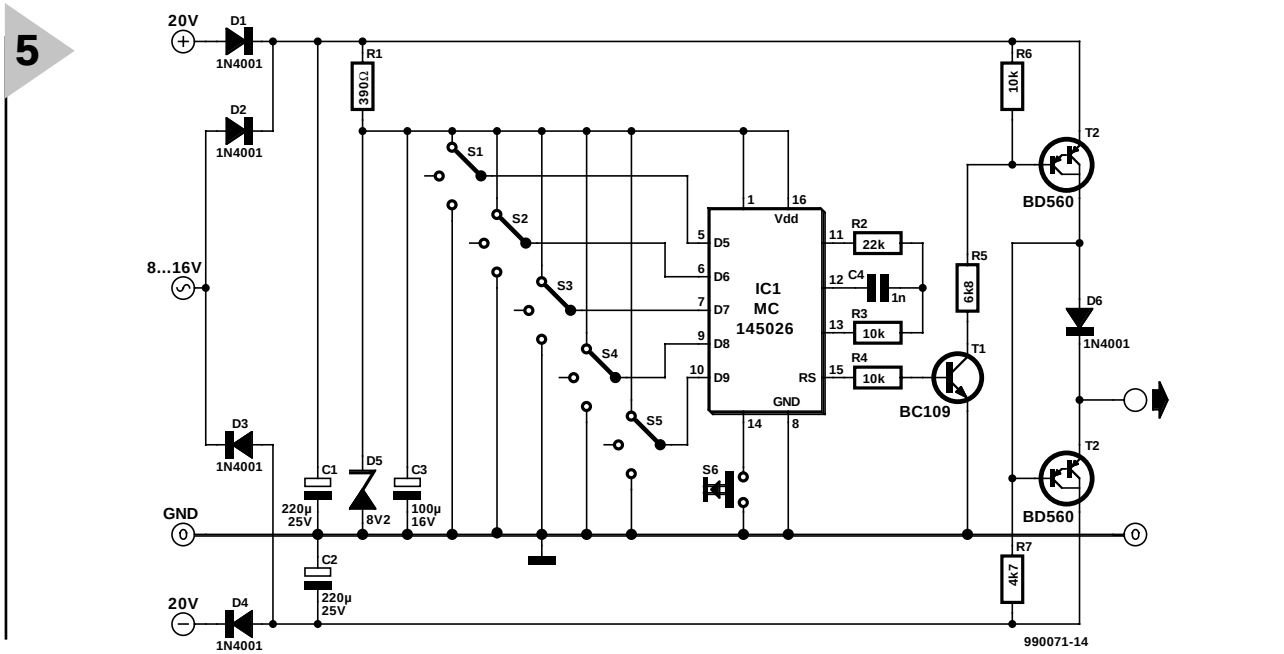

Table 2. Programming table for setting up the decoder.

version transistors T_4 and T_5 as well as resistors R_9 and R_{10} are not used, but that two wire bridges are put in their place. Connecting the motors has already been described earlier.

In Märklin locomotives, the headlights and frontal signals are usually interlinked at one side of the body of the locomotive. This arrangement may be kept for the present decoder. It should be noted, however, that in the case of two-rail operation the intensity of the lights may be affected, depending on the polarity of the rails. It is, therefore, better to supply the lamps and other users connected to the function outputs from the +V terminal (M_3).

Finally, note that no provision has been made on the board for the infra-red LED and associated resistor: these should be mounted elsewhere. This should, of course, be done in such a manner that the diode points in the direction of the infra-red decoder.

SETTING UP

Five registers have been reserved in the EEPROM to set the following functions: the loco address, the maximum speed, the rate of acceleration and deceleration, the brightness of the headlights, and the flashing rate of function 4.

The registers are set by a combination of data bits at loco address 79. Since this applies to all loco decoders, make sure that there is only one locomotive on the track, otherwise all locomotives are programmed with the same settings. Possible loco addresses and data settings are shown in **Table 2**.

When trit 5 is 0, a loco address will be programmed according to data trits 6–9. When trit 5 is x (01) or 1 (11), the other registers can be programmed: which ones depend on trit 6. All this is arranged by the EEDTS Pro software.

Where stand-alone working is wanted, the registers may be adapted with the aid of the auxiliary circuit shown in **Figure 5**. This is based on a Motorola 145026 (transmitter) that is permanently set to address 79. There is no ready-made printed-circuit board for the auxiliary circuit, so this will have to be built on a small piece of prototyping board or similar.

The data trits can be set with five miniature 3-position switches in accordance with the codes shown in Table 2. When the push-button switch is pressed, the data appear at the output in serial form and the loco decoder is programmed with the set value. When the loco address is being set, the value in the loco table is superseded by that set with the diode matrix. In principle, it is, therefore, possible to supersede all values in the table by soldering all diode combinations once.

The decoder may be supplied by the ±20 V line from the EEDTS booster amplifier or by a mains adaptor with a secondary alternating voltage of 8–16 V.

[990071]

Table 2

Trit 98765		
0	LLLL0	program loco address
1	MMM01	program maximum speed
2	AAA0X	program rate of acceleration/deceleration
4	SSS11	program brightness of headlights
5	KKK1X	program flashing rate of function 4

loco addresses						data settings	
	LLLL			LLLL			MMM
							AAA
							SSS
							KKK
0	0000*		40	1111		0	000
1	0001		41	111X		1	001
2	000X		42	11X0		2	00X
3	0010		43	11X1		3	010
4	0011		44	11XX		4	011
5	001X		45	1X00		5	01X
6	00X0		46	1X01		6	OX0
7	00X1		47	1X0X		7	0X1
8	00XX		48	1X10		8	0XX
9	0100		49	1X11		9	100
10	0101		50	1X1X		10	101
11	010X		51	1XX0		11	10X
12	0110		52	1XX1		12	110
13	0111		53	1XXX		13	111
14	011X		54	X000		14	11X
15	01X0		55	X001		15	1X0
16	01X1		56	X00X		16	1X1
17	01XX		57	X010		17	1XX
18	0X00		58	X011		18	X00
19	0X01		59	X01X		19	X01
20	0X0X		60	X0X0		20	X0X
21	0X10		61	X0X1		21	X10
22	0X11		62	X0XX		22	X11
23	0X1X		63	X100		23	X1X
24	0XX0		64	X101		24	XX0
25	0XX1		65	X10X		25	XX1
26	0XXX		66	X110		26	XXX
27	1000		67	X111			
28	1001		68	X11X			
29	100X		69	X1X0			
30	1010		70	X1X1			
31	1011		71	X1XX			
32	101X		72	XX00			
33	10X0		73	XX01			
34	10X1		74	XX0X			
35	10XX		75	XX10			
36	1100		76	XX11			
37	1101		77	XX1X			
38	110X		78	XXX0			
39	1110		79	XXX1			
			80	XXXX*			

*) cannot be set on Märklin equipment